INLINE 125 QM CRANK
FABRIC UNWINDS FRONT

Dimensions of the Projection Screen

Crank length:
148 cm (fabric height under 220 cm)
167 cm (fabric height above 220 cm)
custom length on request

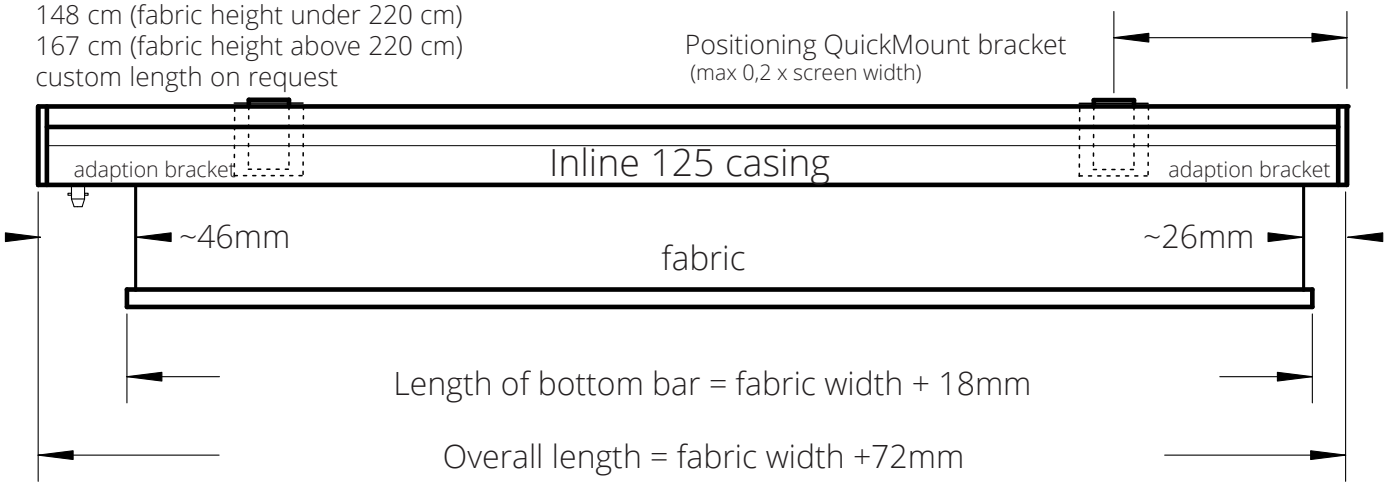

overall length: +/- 2mm

The QuickMount-brackets can be fixed within the mounting area (0,2x casing length) at any position on wall or ceiling. The adaption bracket have to be mounted according to the QuickMount positioning on top of the casing by clamp bars and 6 screws each. The projection screen can be hooked onto the QuickMount brackets via these adaption brakets and secured.

Cross-section Inline-QuickMount

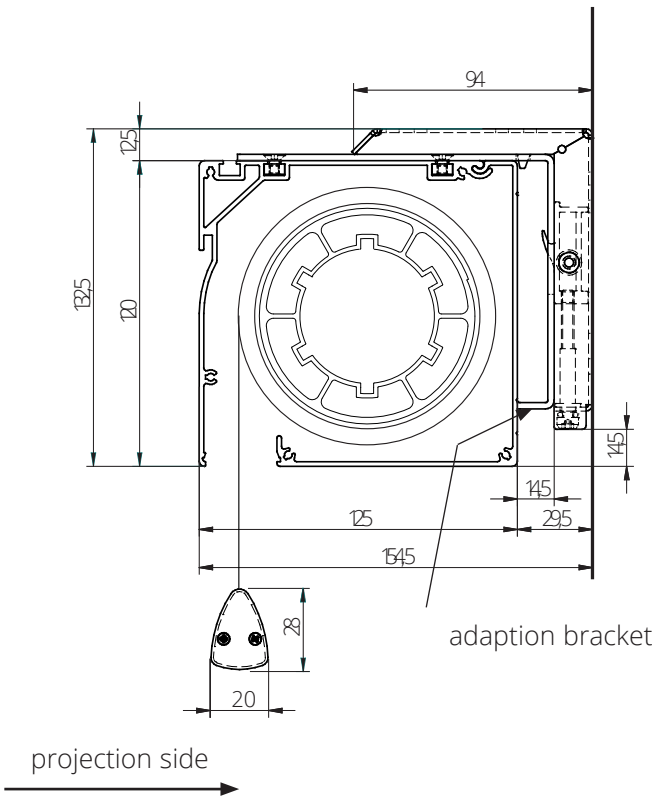

QuickMount Bracket

for wall or ceiling mounting

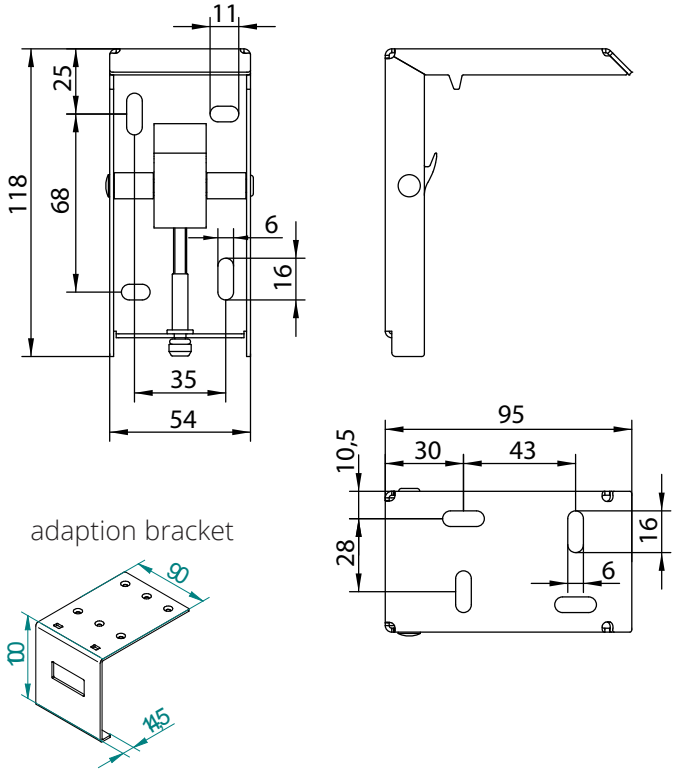

Version: 11/17

AV Stumpfl GmbH | Mitterweg 46 | A-4702 Wallern | Tel: +43 (7249) 42811 | Fax: +43 (7249) 42811 4
AVstumpfl@AVstumpfl.com | www.AVstumpfl.com